Summary in Graph

Exam Summary (GO Classes | Digital Logic | Boolean Algebra, Minimization, Number System | Weekly Quiz 3)

Qs. Attempted:	0 (0 + 0)	Correct Marks:	0 (0 + 0)
Correct Attempts:	0 (0 + 0)	Penalty Marks:	0 (0 + 0)
Incorrect Attempts:	0 (0 + 0)	Resultant Marks:	0 (0 + 0)

Total Questions:	15 (5 + 10)
Total Marks:	25 (5 + 20)
Exam Duration:	45 Minutes
Time Taken:	0 Minutes

Individual Question Statistics

Select Metric: Marks Obtained

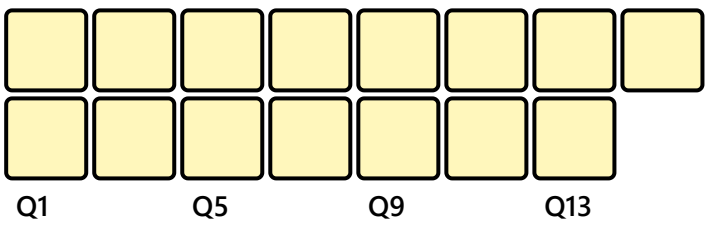

* Average Stats based on first-attempt stats of Top 10% (34) out of 343 users

EXAM RESPONSE EXAM STATS FEEDBACK

Technical

Q #1 Multiple Select Type Award: 1 Penalty: 0 Digital Logic

Select the Boolean function(s) equivalent to $x + yz$, where x, y, and z are Boolean variables, and $+$ denotes logical OR operation.

A. $x + z + xy$
B. $(x + y)(x + z)$
C. $x + xy + yz$
D. $x + xz + xy$

Your Answer: | Correct Answer: B;C | Not Attempted | Time taken: 00min 00sec | Discuss

Q #2 | Multiple Choice Type | Award: 1 | Penalty: 0.33 | Digital Logic

Match the logic gates in **Column A** with their equivalents in **Column B.**

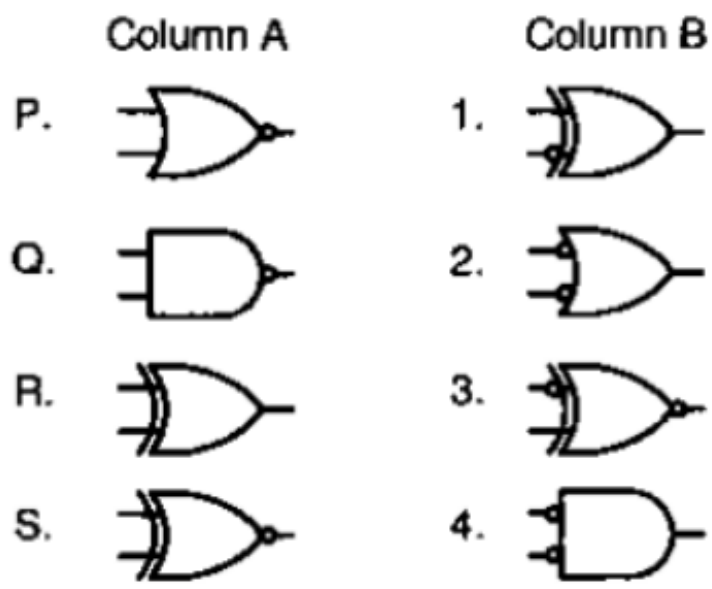

A. P-2, Q-4, R-1, S-3
B. P-4, Q-2, R-1, S-3
C. P-2, Q-4, R-3, S-1
D. P-4, Q-2, R-3, S-1

Your Answer: | Correct Answer: D | Not Attempted | Time taken: 00min 00sec | Discuss

Q #3 | Numerical Type | Award: 1 | Penalty: 0 | Digital Logic

The number of bytes required to represent the decimal number 1856357 in packed BCD (Binary Coded Decimal) form is _____.

Your Answer: | Correct Answer: 4 | Not Attempted | Time taken: 00min 01sec | Discuss

Q #4 | Multiple Choice Type | Award: 1 | Penalty: 0.33 | Digital Logic

The Boolean expression $(X+Y)(X+\overline{Y})+\overline{(X\,\overline{Y})+\overline{X}}$ simplifies to

A. X
B. Y
C. XY
D. $X+Y$

Your Answer: | Correct Answer: A | Not Attempted | Time taken: 00min 00sec | Discuss

Q #5 | Multiple Choice Type | Award: 1 | Penalty: 0.33 | Digital Logic

A function $F(A,B,C)$ defined by three Boolean variables A, B and C when expressed as sum of products is given by

$$F=\overline{A}\,.\,\overline{B}\,.\,\overline{C}+\overline{A}\,.\,B\,.\,\overline{C}+A\,.\,\overline{B}\,.\,\overline{C}$$

where, $\overline{A}$, $\overline{B}$, $and\ \overline{C}$ are the complements of the respective variables. The product of sums (POS) form of the function F is

A. $F = (A+B+C).\left(A+\overline{B}+C\right).\left(\overline{A}+B+C\right)$
B. $F = \left(\overline{A}+\overline{B}+\overline{C}\right).\left(\overline{A}+B+\overline{C}\right).\left(A+\overline{B}+\overline{C}\right)$
C. $F = \left(A+B+\overline{C}\right).\left(A+\overline{B}+\overline{C}\right).\left(\overline{A}+B+\overline{C}\right).\left(\overline{A}+\overline{B}+C\right).\left(\overline{A}+\overline{B}+\overline{C}\right)$
D. $F = \left(\overline{A}+\overline{B}+C\right).\left(\overline{A}+B+C\right).\left(A+\overline{B}+C\right).\left(A+B+\overline{C}\right).(A+B+C)$

Your Answer: | Correct Answer: C | Not Attempted | Time taken: 00min 00sec | Discuss

Q #6 | Multiple Choice Type | Award: 2 | Penalty: 0.67 | Digital Logic

If $(1235)_x = (3033)_y$, where x and y indicate the bases of the corresponding numbers, then

A. $x = 7$ and $y = 5$
B. $x = 8$ and $y = 6$
C. $x = 6$ and $y = 4$
D. $x = 9$ and $y = 7$

Your Answer: | Correct Answer: B | Not Attempted | Time taken: 00min 00sec | Discuss

Q #7 | Multiple Choice Type | Award: 2 | Penalty: 0.67 | Digital Logic

The output Y in the circuit below is always "1" when

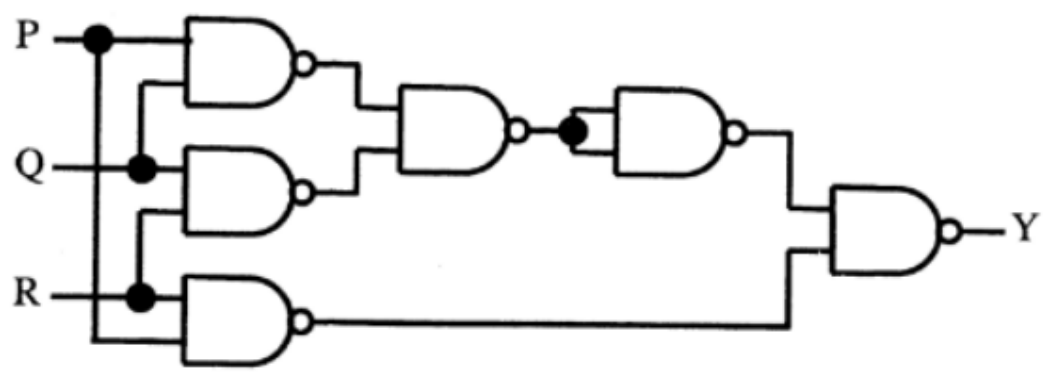

A. two or more of the inputs $\mathrm{P}, \mathrm{Q}, \mathrm{R}$ are "0"
B. two or more of the inputs $\mathrm{P}, \mathrm{Q}, \mathrm{R}$ are "1"
C. any odd number of the inputs $\mathrm{P}, \mathrm{Q}, \mathrm{R}$ is "0"
D. any odd number of the inputs $\mathrm{P}, \mathrm{Q}, \mathrm{R}$ is "1"

Your Answer: | Correct Answer: B | Not Attempted | Time taken: 00min 00sec | Discuss

Q #8 | Multiple Choice Type | Award: 2 | Penalty: 0.67 | Digital Logic

Following is the $\mathrm{K\text{-}map}$ of a Boolean function of five variables P, Q, R, S and X. The minimum sum-of-product (SOP) expression for the function is

RS \ PQ	00	01	11	10
00	0	0	0	0
01	1	0	0	1
11	1	0	0	1
10	0	0	0	0

X=0

RS \ PQ	00	01	11	10
00	0	1	1	0
01	0	0	0	0
11	0	0	0	0
10	0	1	1	0

X=1

A. $\overline{P}\,\overline{Q}\,S\,\overline{X} + P\,\overline{Q}\,S\,\overline{X} + Q\,\overline{R}\,\overline{S}\,X + Q\,R\,\overline{S}\,X$
B. $\overline{Q}\,S\,\overline{X} + Q\,\overline{S}\,X$
C. $\overline{Q}\,S\,X + Q\,\overline{S}\,\overline{X}$
D. $\overline{Q}\,S + Q\overline{S}$

Your Answer: | Correct Answer: B | Not Attempted | Time taken: 00min 00sec | Discuss

Q #9 | Multiple Choice Type | Award: 2 | Penalty: 0.67 | Digital Logic

In the figure shown, the output $Y = AB + \overline{C}\ \overline{D}$ is required to be .The gates $G1$ and $G2$ must be, respectively,

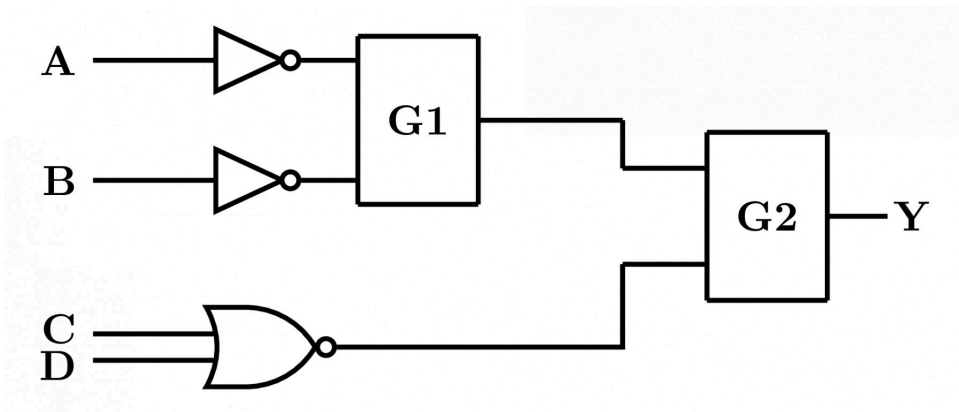

A. NOR, OR
B. OR, NAND
C. NAND, OR
D. AND, NAND

Your Answer: | Correct Answer: A | Not Attempted | Time taken: 00min 00sec | Discuss

Q #10 | Multiple Choice Type | Award: 2 | Penalty: 0.67 | Digital Logic

A function of Boolean variables X, Y and Z is expressed in terms of the min-terms as

$$F(X, Y, Z) = \Sigma(1, 2, 5, 6, 7)$$

Which one of the product of sums given below is equal to the function $F(X, Y, Z)$?

A. $(\overline{X} + \overline{Y} + \overline{Z}) \cdot (\overline{X} + Y + Z) \cdot (X + \overline{Y} + \overline{Z})$
B. $(X + Y + Z) \cdot (X + \overline{Y} + \overline{Z}) \cdot (\overline{X} + Y + Z)$
C. $(\overline{X} + \overline{Y} + Z) \cdot (\overline{X} + Y + \overline{Z}) \cdot (X + \overline{Y} + Z) \cdot (X + Y + \overline{Z}) \cdot (X + Y + Z)$
D. $(X + Y + \overline{Z}) \cdot (\overline{X} + Y + Z) \cdot (\overline{X} + Y + \overline{Z}) \cdot (\overline{X} + \overline{Y} + Z) \cdot (\overline{X} + \overline{Y} + \overline{Z})$

Your Answer: | Correct Answer: B | Not Attempted | Time taken: 00min 00sec | Discuss

Q #11 Multiple Choice Type | Award: 2 | Penalty: 0.67 | Digital Logic

The Boolean expression $F(X,Y,Z) = \overline{X}\,Y\,\overline{Z} + X\,\overline{Y}\,\overline{Z} + X\,Y\,\overline{Z} + X\,Y\,Z$ converted into the canonical product of sum (POS) form is

A. $(X+Y+Z)(X+Y+\overline{Z})(X+\overline{Y}+\overline{Z})(\overline{X}+Y+\overline{Z})$
B. $(X+\overline{Y}+Z)(\overline{X}+Y+\overline{Z})(\overline{X}+\overline{Y}+Z)(\overline{X}+\overline{Y}+\overline{Z})$
C. $(X+Y+Z)(\overline{X}+Y+\overline{Z})(X+\overline{Y}+Z)(\overline{X}+\overline{Y}+\overline{Z})$
D. $(X+\overline{Y}+\overline{Z})(\overline{X}+Y+Z)(\overline{X}+\overline{Y}+Z)(X+Y+Z)$

Your Answer: | Correct Answer: A | Not Attempted | Time taken: 00min 00sec | Discuss

Q #12 Multiple Choice Type | Award: 2 | Penalty: 0.67 | Digital Logic

A 3-input majority gate is defined by the logic function $M(a,b,c) = ab + bc + ca$. Which one of the following gates is represented by the function $M(\overline{M(a,b,c)}, M(a,b,\overline{c}), c)$?

A. 3-input NAND gate
B. 3-input XOR gate
C. 3-input NOR gate
D. 3-input XNOR gate

Your Answer: | Correct Answer: B | Not Attempted | Time taken: 00min 00sec | Discuss

Q #13 Multiple Choice Type | Award: 2 | Penalty: 0.67 | Digital Logic

In the circuit shown in the figure, if $C = 0$, the expression for Y is

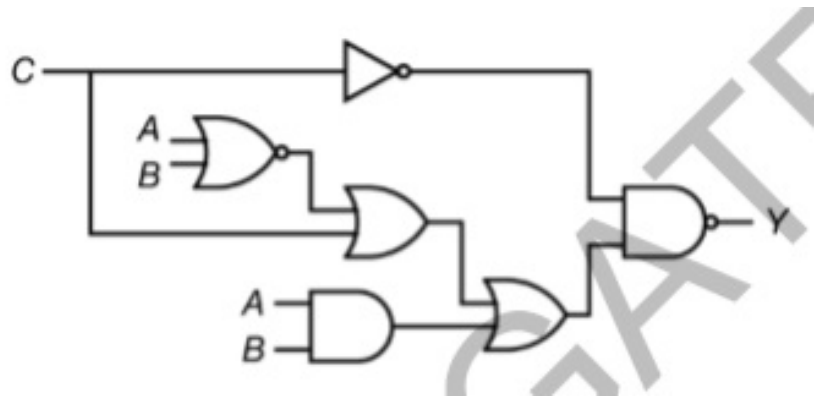

A. $Y = A\overline{B} + \overline{A}B$
B. $Y = A + B$
C. $Y = \overline{A} + \overline{B}$
D. $Y = A\,B$

Your Answer: | Correct Answer: A | Not Attempted | Time taken: 00min 00sec | Discuss

Q #14 Multiple Choice Type | Award: 2 | Penalty: 0.67 | Digital Logic

The output F in the digital logic circuit shown in the figure is

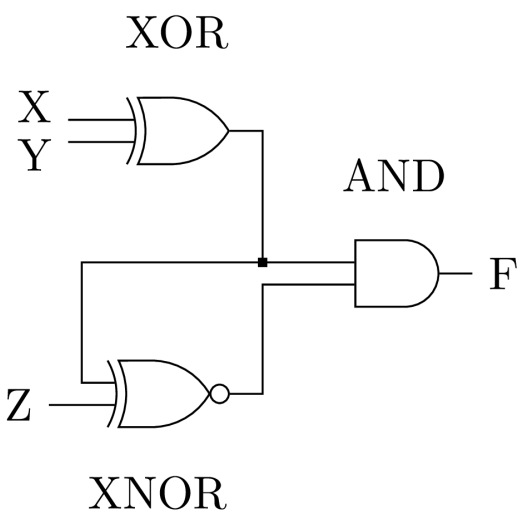

A. $F = \overline{X}\,Y\,Z + X\,\overline{Y}\,Z$
B. $F = \overline{X}\,Y\,\overline{Z} + X\,\overline{Y}\,\overline{Z}$
C. $F = \overline{X}\,\overline{Y}\,Z + X\,Y\,Z$
D. $F = \overline{X}\,\overline{Y}\,\overline{Z} + X\,Y\,Z$

Your Answer: | Correct Answer: A | Not Attempted | Time taken: 00min 00sec | Discuss

Q #15 | Multiple Choice Type | Award: 2 | Penalty: 0.67 | Digital Logic

Consider the Boolean function $F(w, x, y, z) = wy + xy + \overline{w}\,xyz + \overline{w}\,\overline{x}\,y + xz + \overline{x}\,\overline{y}\,\overline{z}$. Which one of the following is the complete set of essential prime implicants?

A. $w, y, xz, \overline{x}\,\overline{z}$
B. w, y, xz
C. $y, \overline{x}\,\overline{y}\,\overline{z}$
D. $y, xz, \overline{x}\,\overline{z}$

Your Answer: | Correct Answer: D | Not Attempted | Time taken: 00min 00sec | Discuss

Copyright & Stuff